RTU DIGITAL INPUTS TERMINATIONS

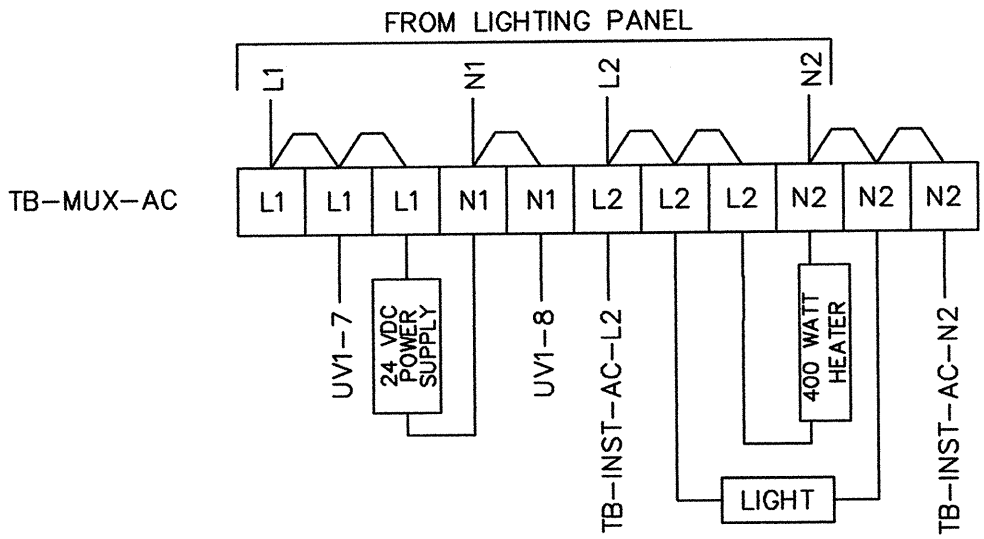

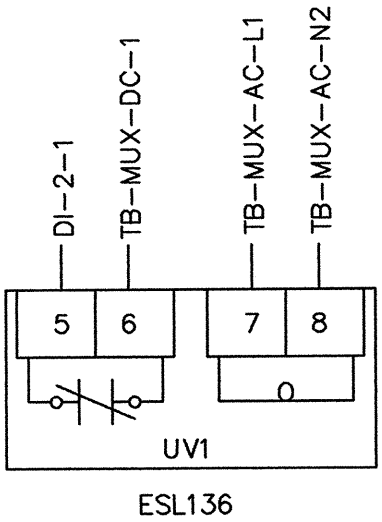

RTU DIGITAL INPUT TERMINATOR

TANK INTRUSION	+	DI-1-1	131XA
		DI-1-2	–
AC POWER FAIL	+	DI-2-1	UV1-5
	–	DI-2-2	–
DC POWER FAIL	+	DI-3-1	+24 VDC
	–	DI-3-2	–
RTU LOW TEMP	+	DI-4-1	TSL
	–	DI-4-2	–

I/O TERMINATIONS IN MULTIPLEXER CABINETS

REV. 2004

CITY OF COLUMBUS, OHIO
DEPARTMENT OF PUBLIC UTILITIES
DIVISION OF WATER

APPROVED
RC Westerfield 1-21-05
ADMINISTRATOR DATE

STANDARD DETAIL
TANK MULTIPLEXER PANEL
POINT-TO-POINT WIRING

L-8701J