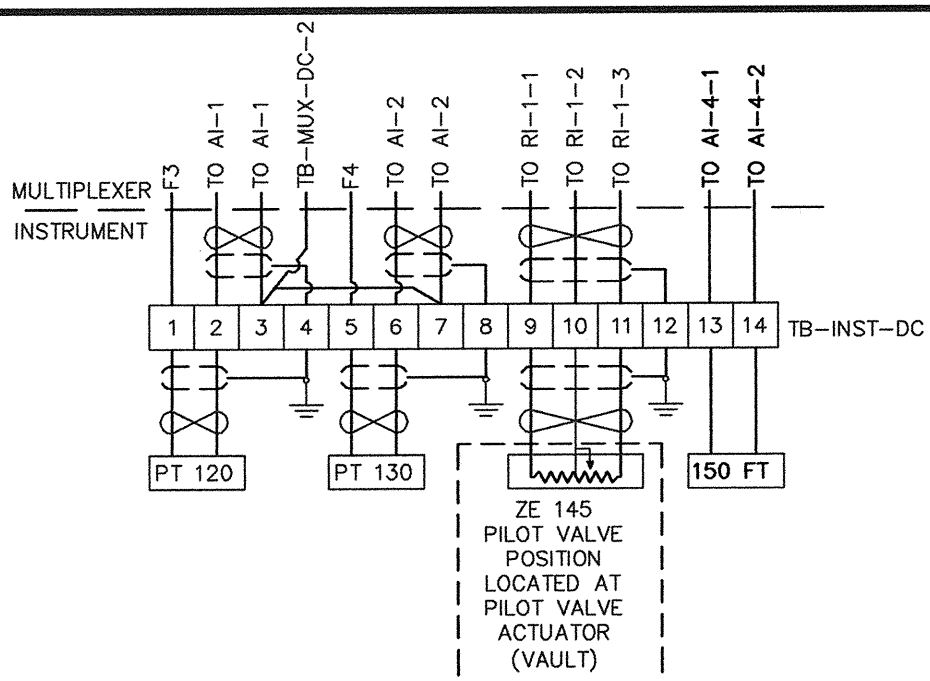

RTU ANALOG INPUT TERMINATOR

UPSTREAM PRESSURE	AI-1-1	TB-INST-DC-2
	AI-1-2	TB-INST-DC-3
DOWNSTREAM PRESSURE	AI-2-1	TB-INST-DC-6
	AI-2-2	TB-INST-DC-7
PILOT VALVE POSITION	AI-3-1	TB-INST-DC-4
	AI-3-2	TB-INST-DC-5
FLOW	AI-4-1	TB-INST-DC-13
	AI-4-2	TB-INST-DC-14

RTU DIGITAL INPUT TERMINATOR

POWER FAIL	+	DI-1-1	UV-5
	−	DI-1-2	
LOW CABINET TEMP	+	DI-2-1	TB-INST-AC-18
	−	DI-2-2	
VAULT HIGH WATER ALARM	+	DI-3-1	TB-INST-AC-16
	−	DI-3-2	
SUMP PUMP	+	DI-4-1	SR-5
	−	DI-4-2	
PILOT VALVE COMPUTER /LOCAL MANUAL	+	DI-5-1	TB-INST-AC-8
	−	DI-5-2	
SPARE	+	DI-6-1	DI-6
	−	DI-6-2	
DC POWER	+	DI-7-1	
	−	DI-7-2	
SPARE	+	DI-8-1	
	−	DI-8-2	TB-MUX-DC-2

RTU TIMED MODULATING OUTPUT TERMINATOR

INCREASE PRESSURE SETTING	MO-1-1	TB-MUX-DC-1
	MO-1-2	R2-6
DECREASE PRESSURE SETTING	MO-2-1	
	MO-2-2	R1-6

REV. 2004

CITY OF COLUMBUS, OHIO
DEPARTMENT OF PUBLIC UTILITIES
DIVISION OF WATER

APPROVED
RC Westerfield 1-21-05
ADMINISTRATOR DATE

STANDARD DETAIL
PRESSURE REDUCING VALVE PANELS
MULTIPLEXER PANEL
POINT TO POINT WIRING

L-8702G