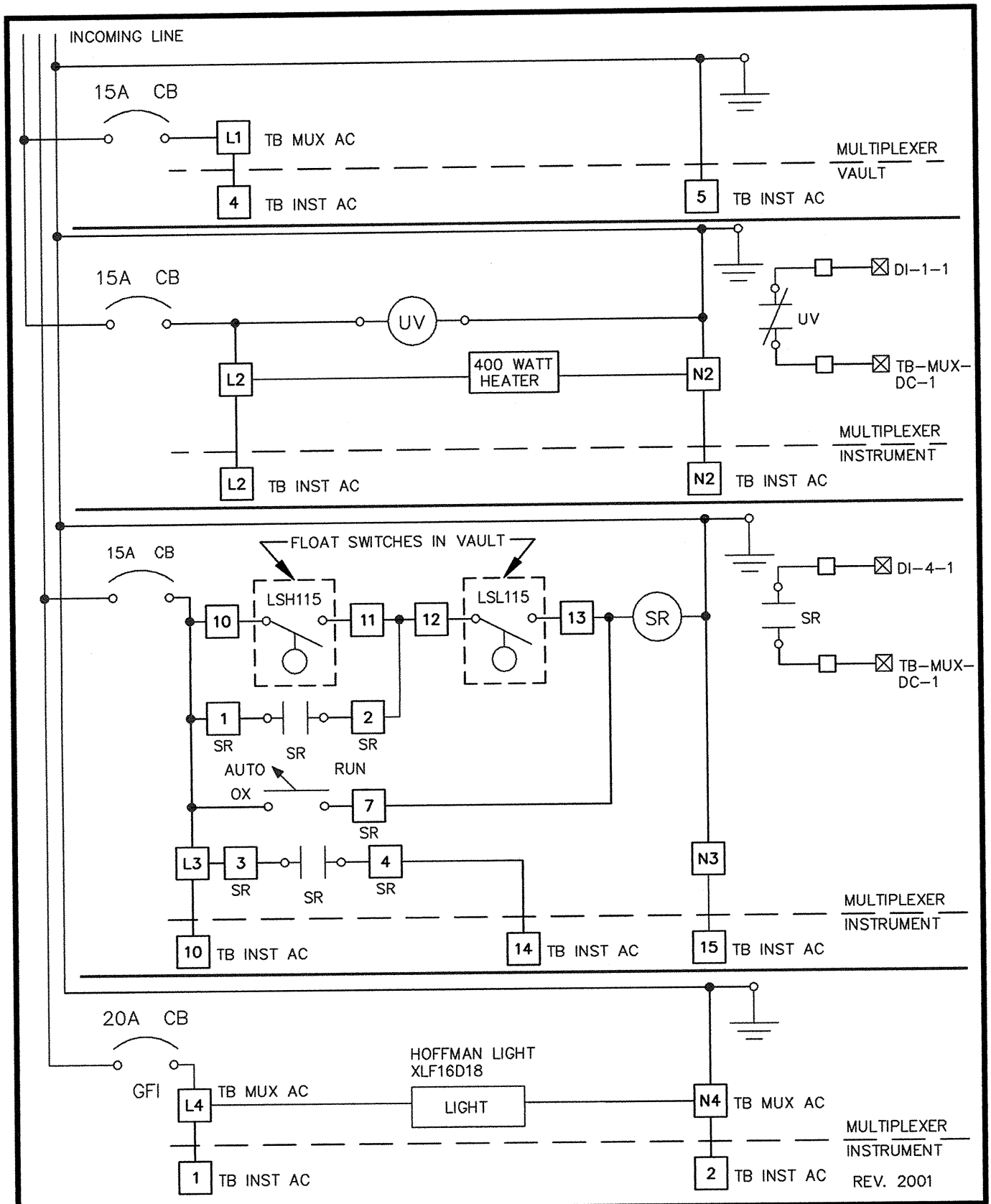

CITY OF COLUMBUS, OHIO
DEPARTMENT OF PUBLIC UTILITIES
DIVISION OF WATER

APPROVED
RC Westerfield 1-21-05
ADMINISTRATOR DATE

STANDARD DETAIL
PRESSURE REDUCING VALVE PANELS
MULTIPLEXER PANEL
WIRING DIAGRAM

L-8702E