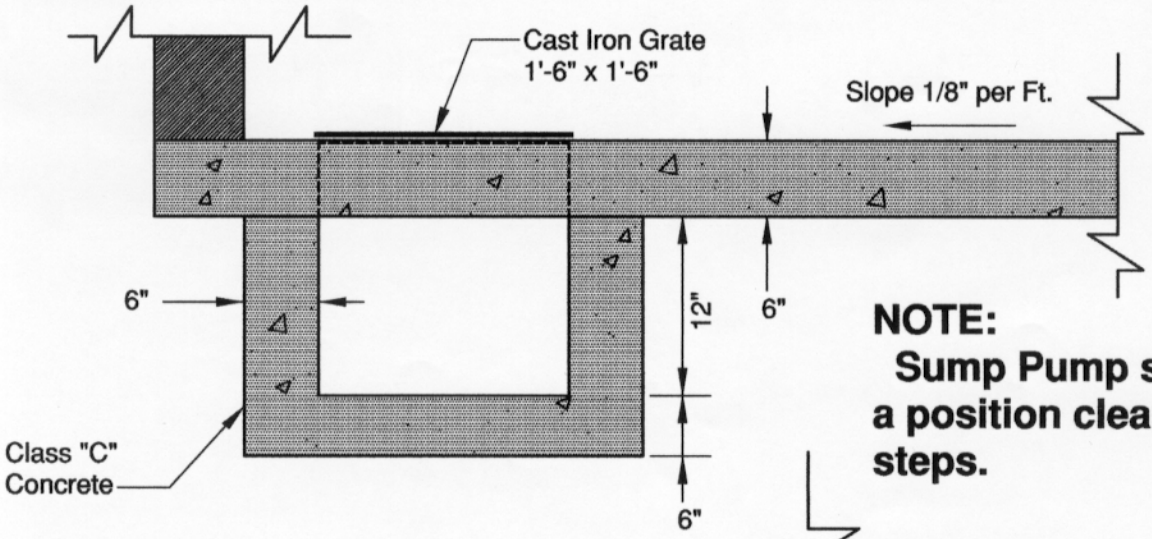

NOTE:
Sump Pump shall be set in a position clear of Manhole steps.

NOTE:
Piping or Electrical Leads shall not be placed in the Manhole Opening.

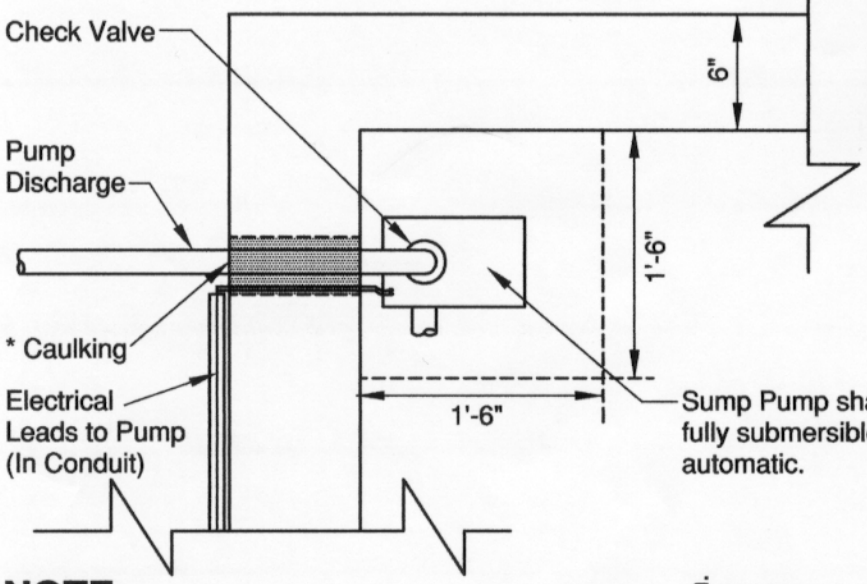

NOTE:
The length and direction of Pump Discharge Pipe shall be as required to prevent re-entry of discharge into the Pit.

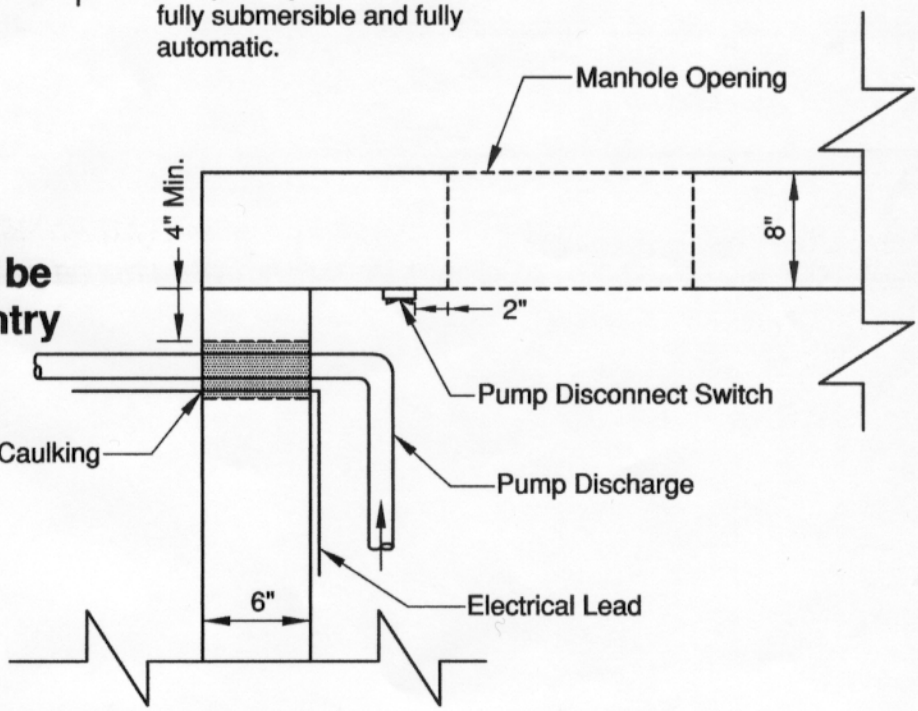

* Opening shall be sealed after installation of piping and Electrical Leads.

CITY OF COLUMBUS DEPARTMENT OF PUBLIC UTILITIES DIVISION OF WATER	STANDARD DETAIL TYPICAL SUMP PUMP SETTING	L-9402
APPROVED: Jeff Hubbard ENGINEER — 4/1/01 DATE		

L-9402.DWG