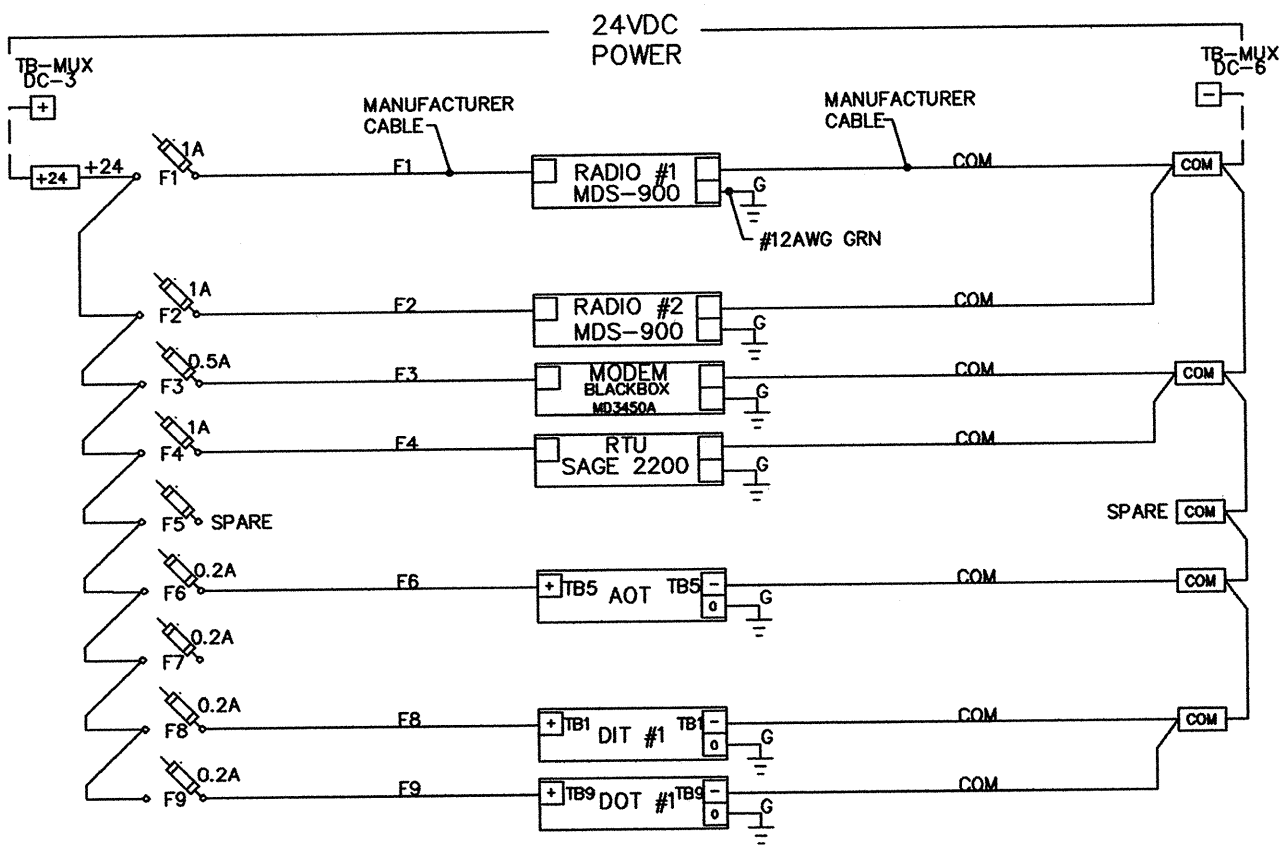

REV. 2004

CITY OF COLUMBUS, OHIO DEPARTMENT OF PUBLIC UTILITIES DIVISION OF WATER APPROVED RC Westerfield 1-21-05 ADMINISTRATOR DATE	POWER DISTRIBUTION	L-8703T