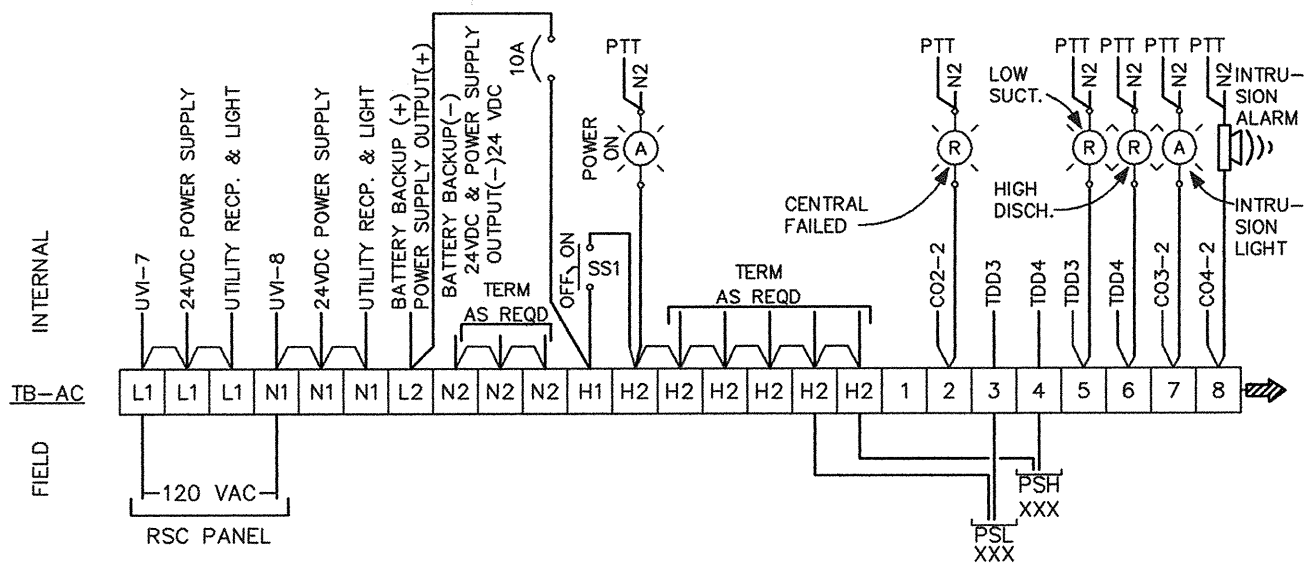

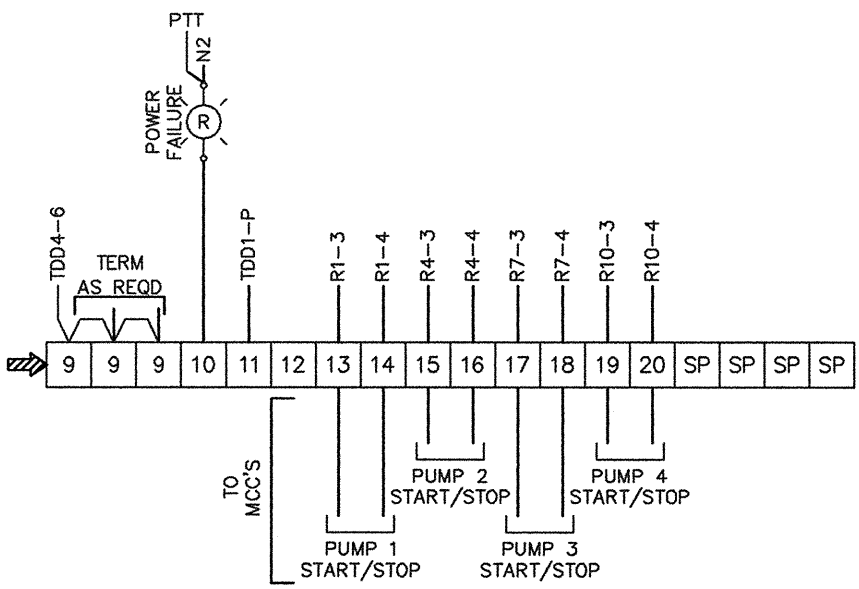

REV. 2004

CITY OF COLUMBUS, OHIO DEPARTMENT OF PUBLIC UTILITIES DIVISION OF WATER APPROVED RC Westerfield 1-21-05 ADMINISTRATOR DATE	STANDARD DETAIL BOOSTER STATION PANEL TERMINATION	L-87031