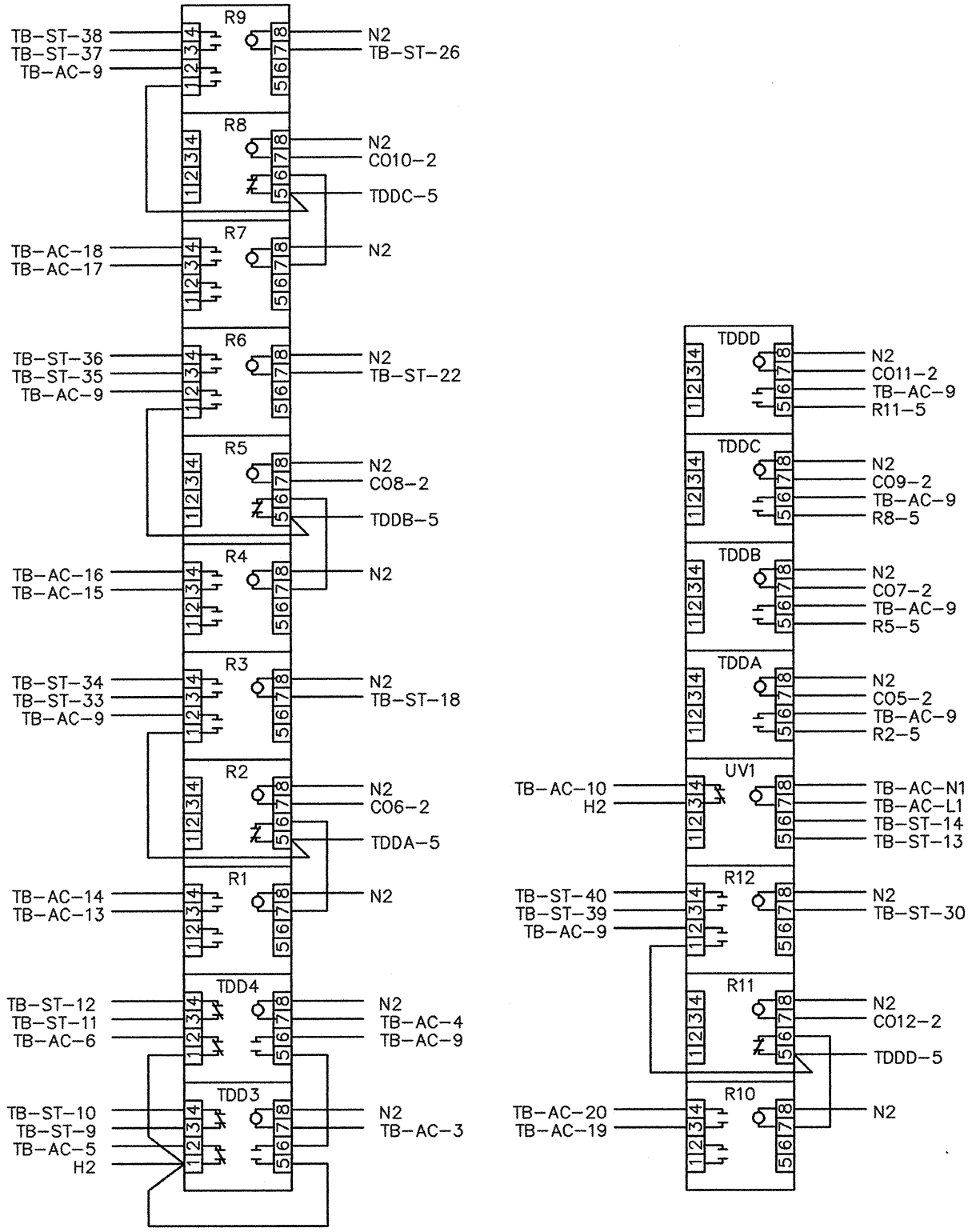

REV. 2004

CITY OF COLUMBUS, OHIO
DEPARTMENT OF PUBLIC UTILITIES
DIVISION OF WATER

APPROVED
RC Westerfield 1-21-05
ENGINEER DATE

STANDARD DETAIL
BOOSTER STATION PANEL
FOUR PUMPS

POINT-TO-POINT DIAGRAM

L-8703H