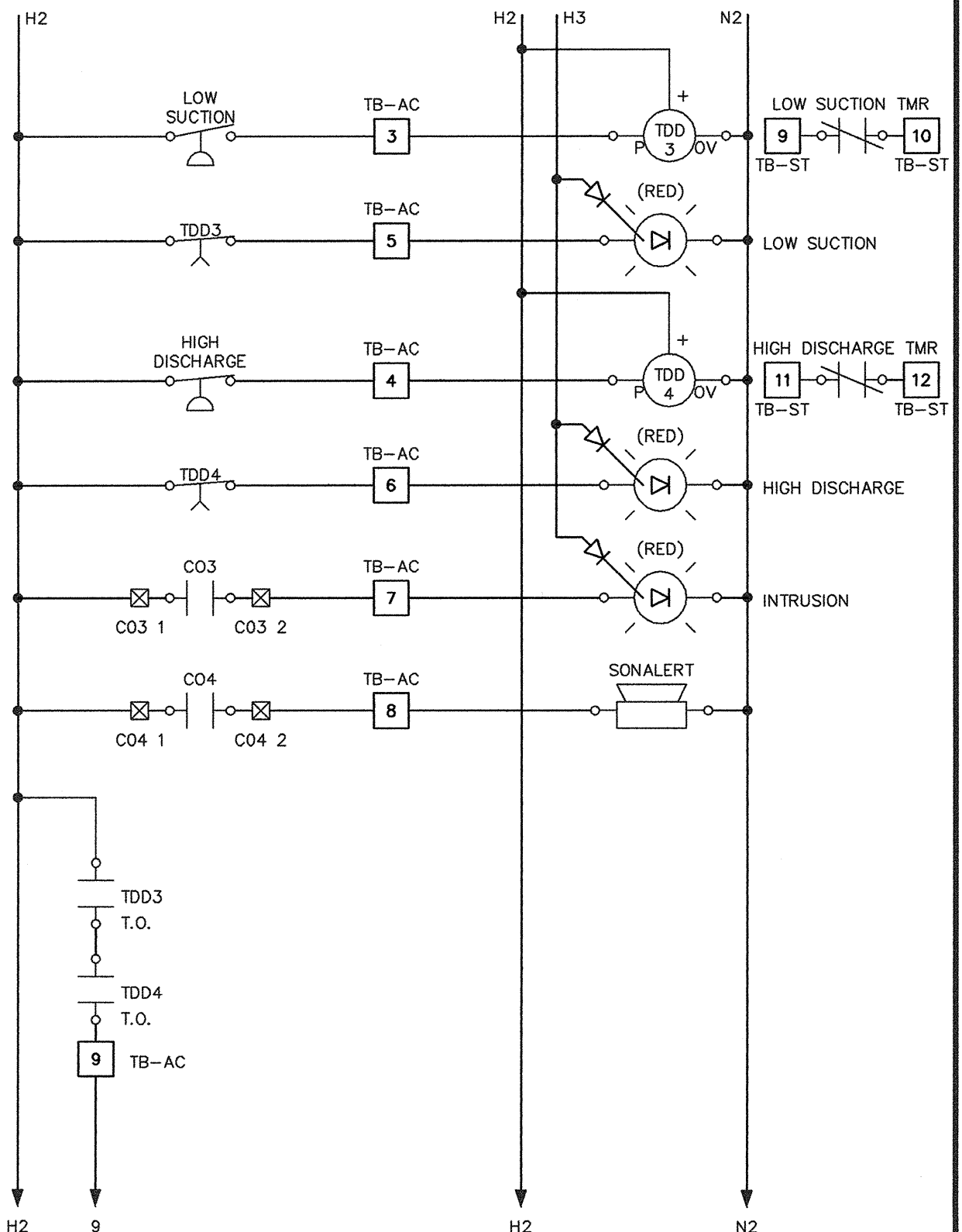

REV. 2004

CITY OF COLUMBUS, OHIO DEPARTMENT OF PUBLIC UTILITIES DIVISION OF WATER APPROVED RC Westerfeld 1-21-05 ADMINISTRATOR DATE	STANDARD DETAIL BOOSTER STATION WIRING DIAGRAM	L-8703E