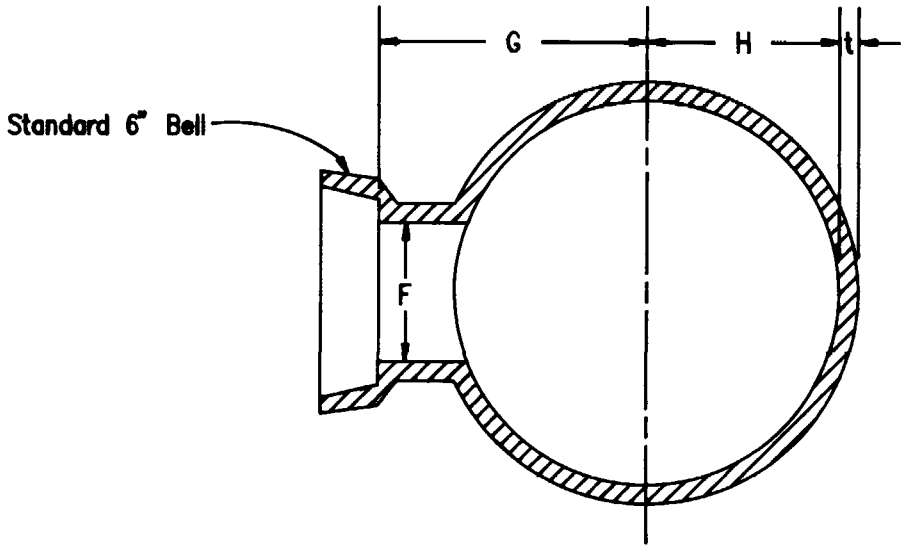


SECTION A–A

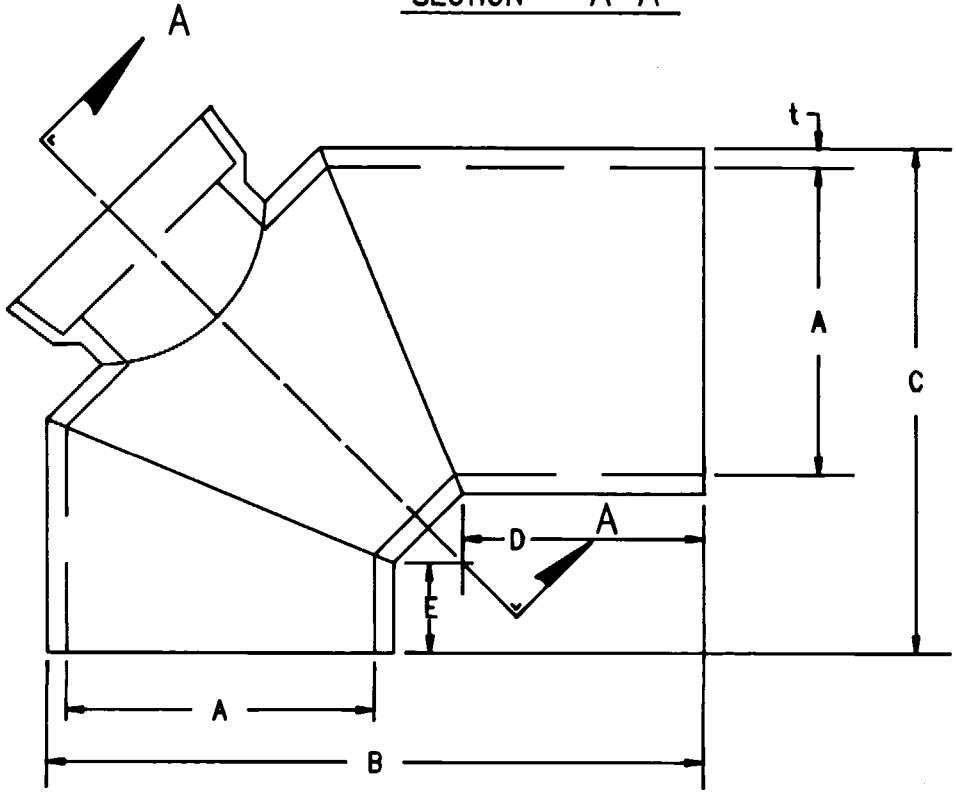


WHEN 8" OR 10" H–H TRAPS ARE SPECIFIED
USE PREFABRICATED TEE SECTIONS AND
CAP THE APPROPRIATE OPENING

Standard Dimensions for 12" & 15" H.H. Catch Basin Traps

| TYPE | A | B | C | D | E | F | G | H | t |
|---|---|---|---|---|---|---|---|---|---|
| 12" Trap | 12" Dia. | 2'–4" | 1'–9" | 13" | 4" | 6" | 8.75" | 6" | 1" |
| 15" Trap | 15" Dia. | 2'–7.75" | 24.75" | 13" | 6" | 6" | 10.75" | 7.5" | 1.25" |

This Drawing Previously AA–S37 & AA–S74

STORMWATER PROGRAM MANAGER

ADMINISTRATOR

APPROVED 12/15/93

REVISED

# H.H. INLET & MANHOLE TRAPS

CITY OF COLUMBUS, OHIO.
DEPARTMENT OF PUBLIC UTILITIES
DIVISION OF SEWERAGE & DRAINAGE

STANDARD CONSTRUCTION DRAWING

DR. CAW
CK.
SHEET 1 OF 1
FILE NO. AA– S163