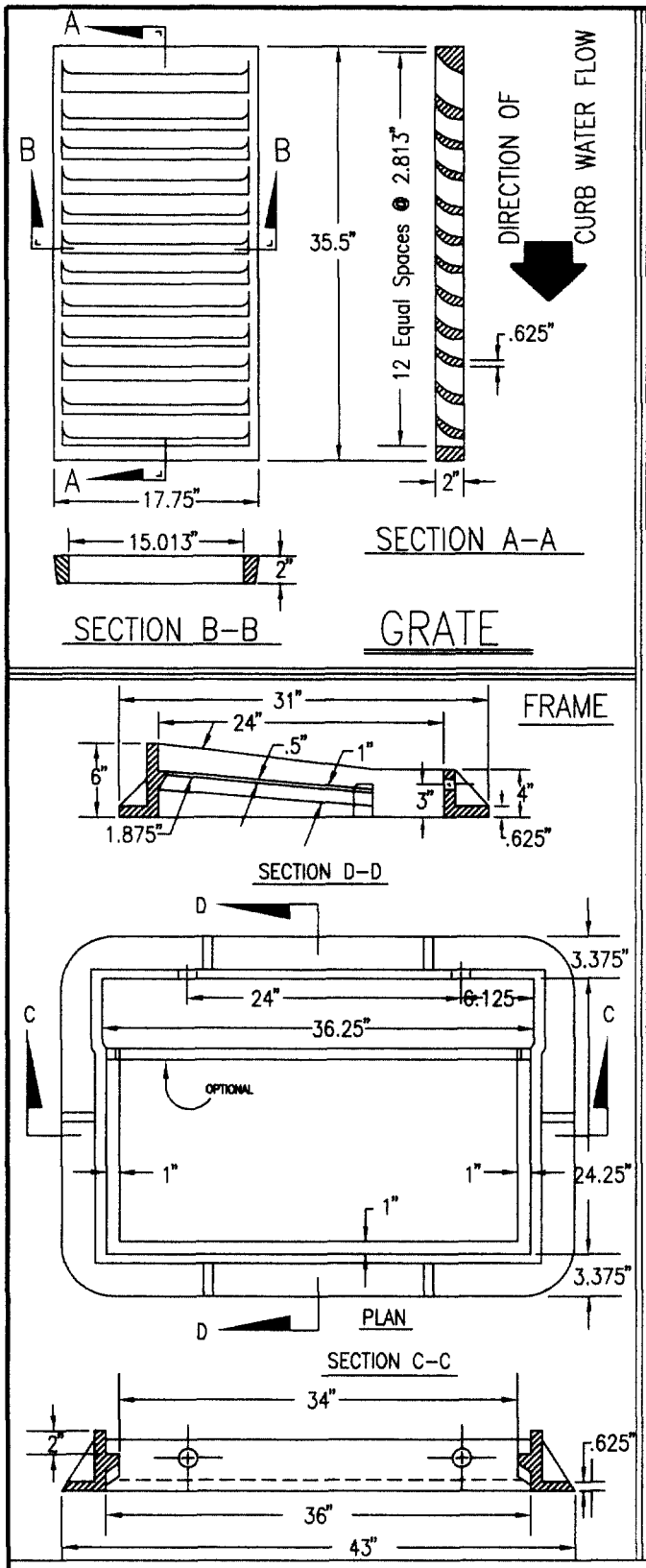

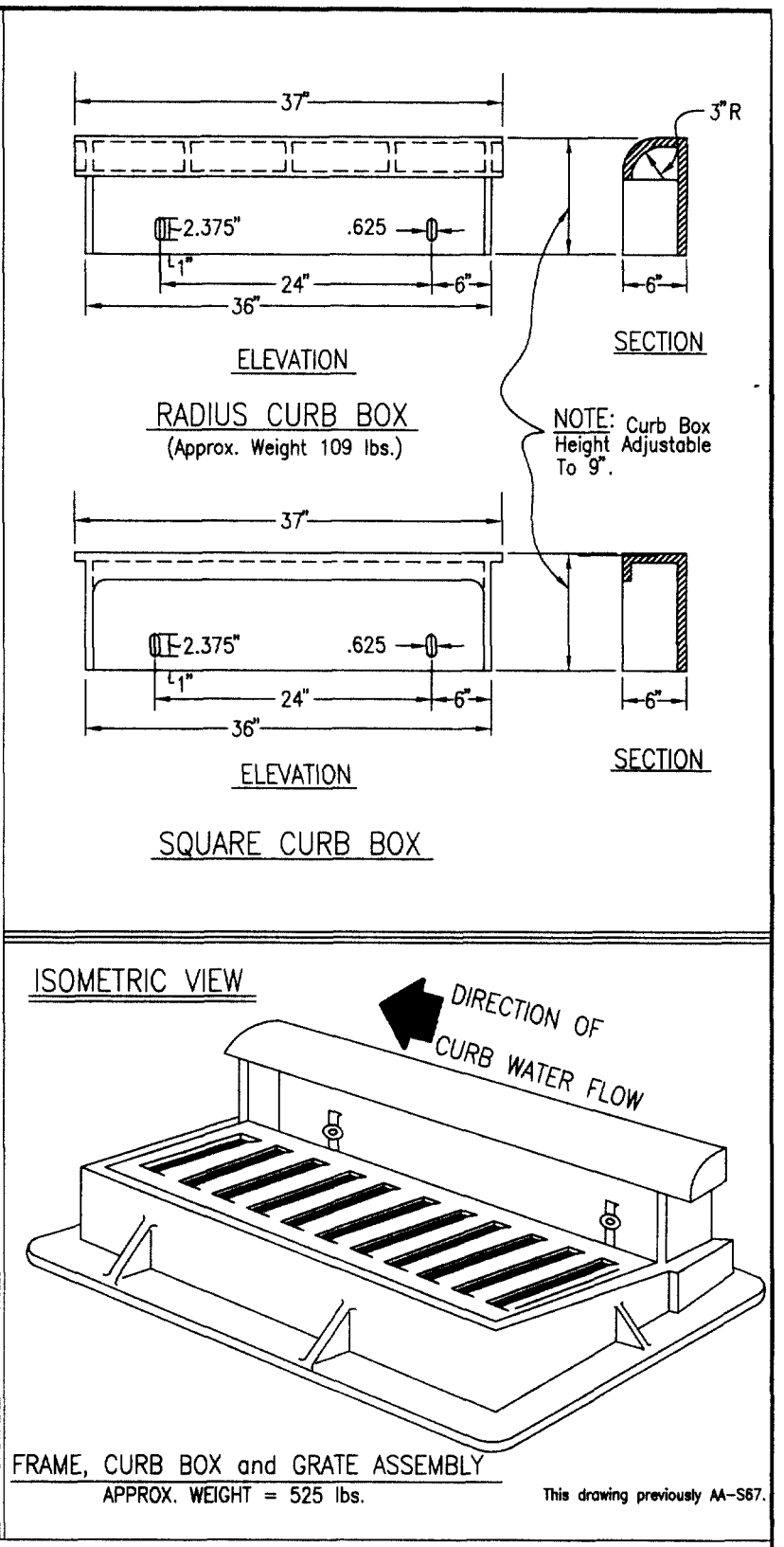

FRAME, CURB BOX and GRATE ASSEMBLY
APPROX. WEIGHT = 525 lbs.

This drawing previously AA-S67.

NOTE:
Frames, grates, and covers shall meet the requirements of 604.02 and AASHTO M306

STORMWATER PROGRAM MANAGER

ADMINISTRATOR

APPROVED

REVISED 5-16-97

CAST IRON FRAME AND GRATE FOR CURB & GUTTER INLET (STD. CURB)

CITY OF COLUMBUS, OHIO.
DEPARTMENT OF PUBLIC UTILITIES
DIVISION OF SEWERAGE & DRAINAGE

STANDARD CONSTRUCTION DRAWING

DR. J.M.R.
CK.

SHEET 1 OF 1

FILE NO. AA-S128