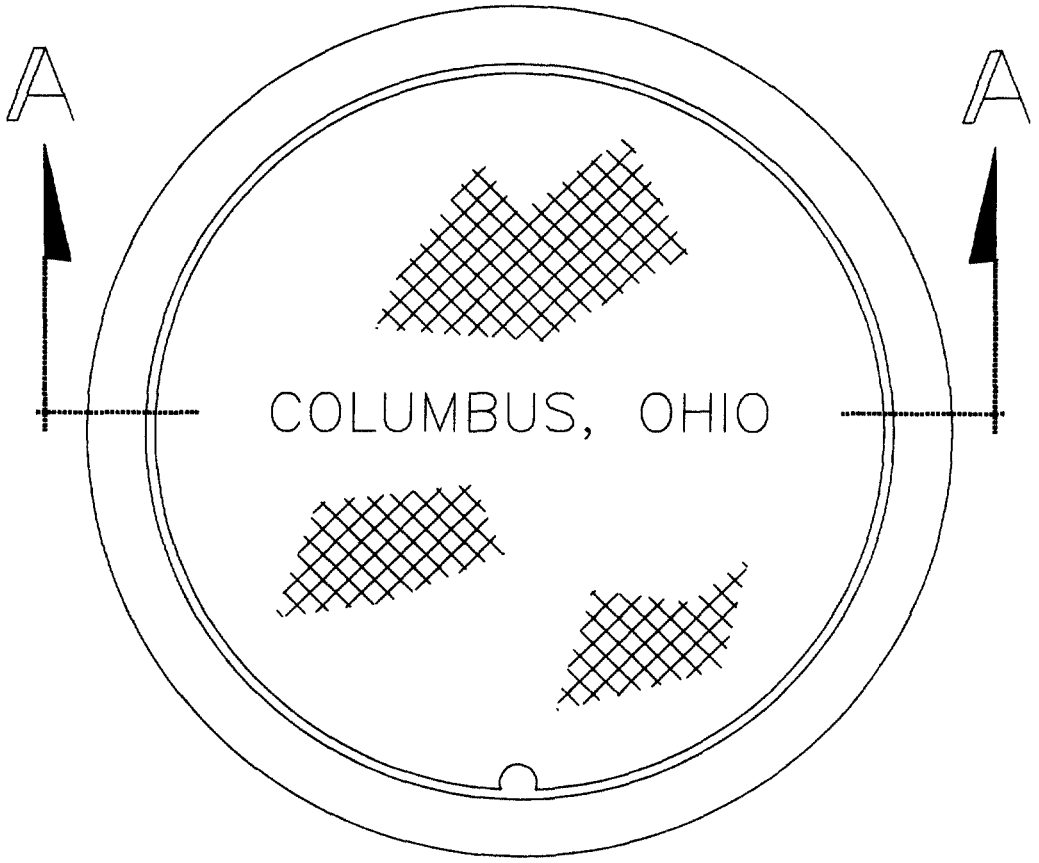

Approximate Weight=108 lbs.

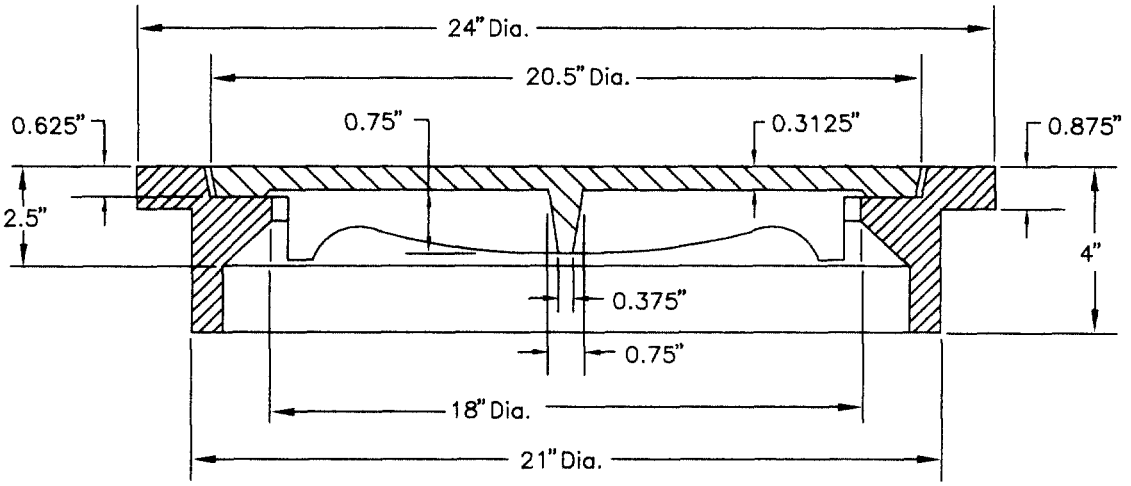

SECTION AA

Note:
Shall meet the requirements of 604.02

STORMWATER PROGRAM MANAGER

ADMINISTRATOR

APPROVED

REVISED 5-16-97

FRAME AND COVER
FOR
48" CATCH BASIN
&
42" & 60" CURB INLETS

CITY OF COLUMBUS
DEPARTMENT OF
PUBLIC UTILITIES
DIVISION OF SEWERAGE & DRAINAGE

STANDARD
CONSTRUCTION DRAWING

DR. CLJ
CK.

SHEET 1
OF 1

FILE NO.
AA-S127