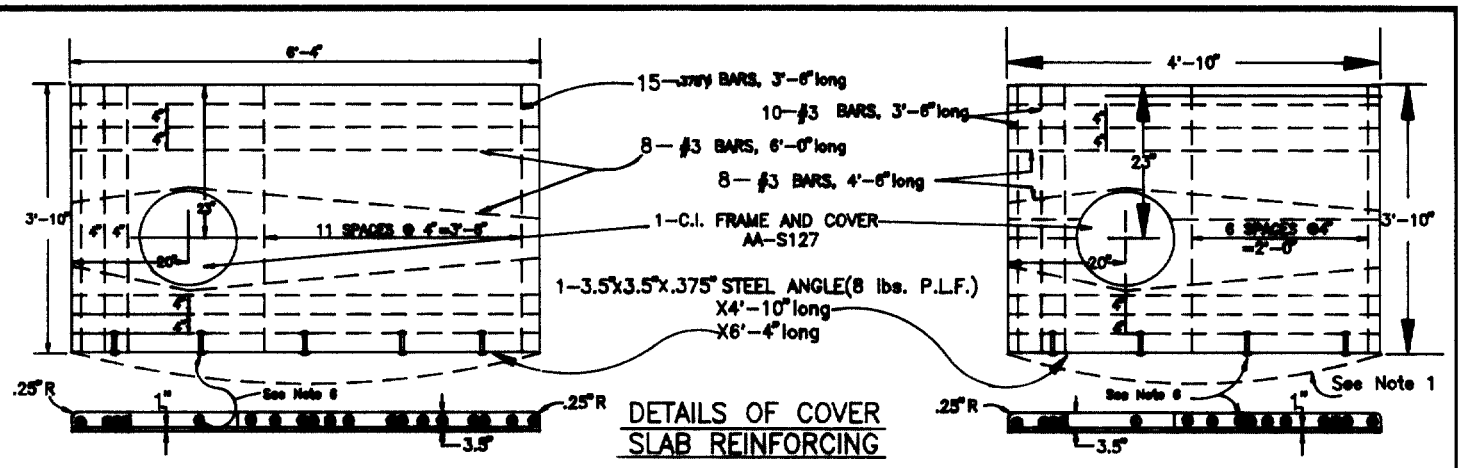

DETAILS OF COVER SLAB REINFORCING

SLAB FOR 60" CURB INLET

SLAB FOR 42" CURB INLET

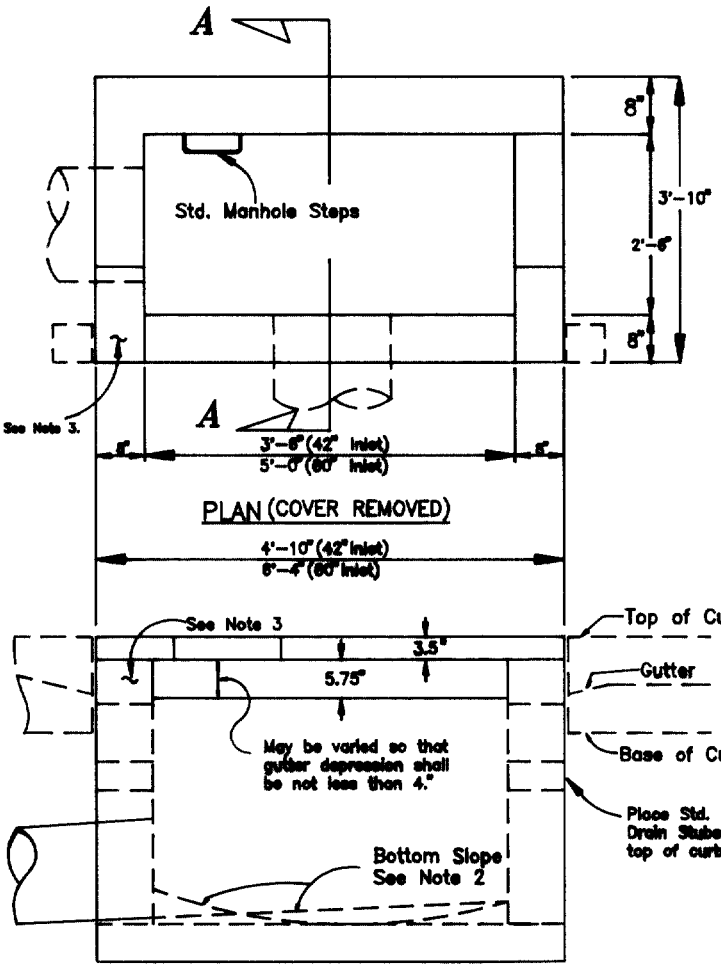

ELEVATION

This drawing previously AA-S50 & AA-S51.

NOTES:

1. Where inlet is to be located within limits of circle curb, if ordered, the slab edge of curb line shall be built to conform to the required radius.
2. The inlet bottom shall be shaped to provide slope of 3" to 4" to outlet pipe, the cross sectional form of bottom and longitudinal slope to be adapted to location of outlet pipe, as directed.
3. In brick wall construction, suitable concrete or stone blocks not less than 8"x8"x16" in size shall be used at corners abutting curb.
4. Outlet pipe may be located in end or side wall. In either case the outlet pipe shall be directed towards the center of the basin.
5. In existing pavements an area approximately 12'x4' for 60" inlets, or 10'x4' for 42" inlets, or as otherwise ordered shall be cut out so that repaving may be shaped to meet the depressed lip of the inlet opening as directed.
6. For anchors use .375" bolts 6" long or .375" steel reinforcement bars 10" long with each end bent over 2" at 90° with one 2" end bend welded to inside face of angle in approved manner.
7. When used in conjunction with curb opening extension(AA-S124) top finished surface of inlet wall to be built at lower level as directed.
8. Construct walls of Class "C" Concrete or brick. If walls are constructed of brick, plaster outside face with lime-cement mortar .5" thick.
9. Precast units shall have a minimum thickness of six inches and be reinforced sufficiently to permit shipping and handling without damage.

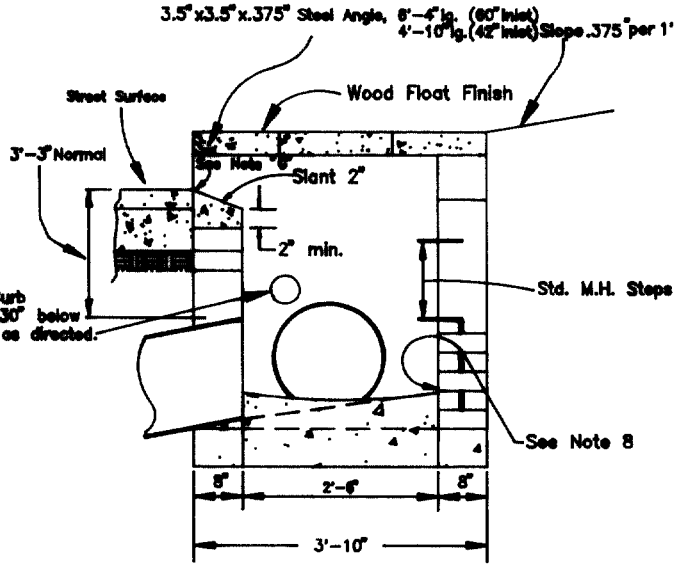

SECTION A—A

STORMWATER PROGRAM MANAGER

ADMINISTRATOR

APPROVED 12/15/93

REVISED

42" & 60" CURB INLETS

CITY OF COLUMBUS, OHIO
DEPARTMENT OF PUBLIC UTILITIES
DIVISION OF SEWERAGE & DRAINAGE

STANDARD CONSTRUCTION DRAWING

DR. JMR	SHEET 1	FILE NO.
CK.	OF 1	AA-S123