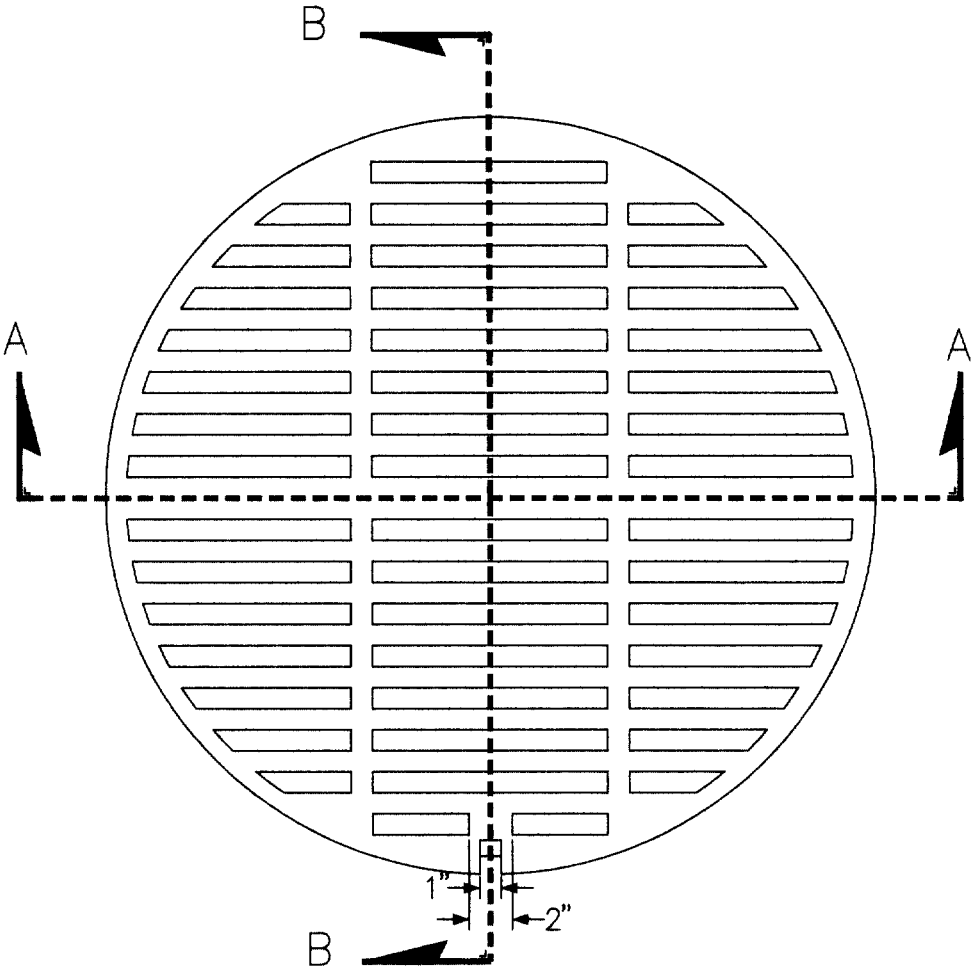

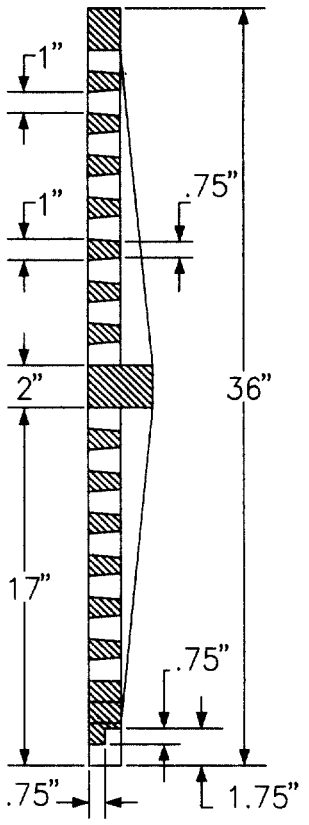

SECTION B–B

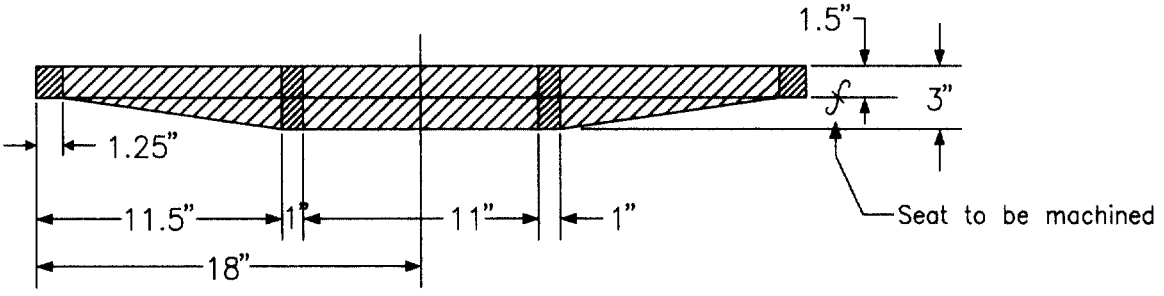

SECTION A–A

Std. Frame as detailed on AA–S114 will be used.
Approx. Weight = 227 lbs.

Note:
Shall meet the rquirements of 604.02 and AASHTO M306

This Drawing Previously AA–S91

STORMWATER PROGRAM MANAGER ADMINISTRATOR	GRATING LID FOR 36" MANHOLE FRAME (HEAVY DUTY) (STORM SEWERS)	CITY OF COLUMBUS DEPARTMENT OF PUBLIC UTILITIES DIVISION OF SEWERAGE & DRAINAGE
		STANDARD CONSTRUCTION DRAWING
APPROVED / REVISED 5–16–97		DR. DJH / CK. / SHEET 1 OF 1 / FILE NO. AA–S116