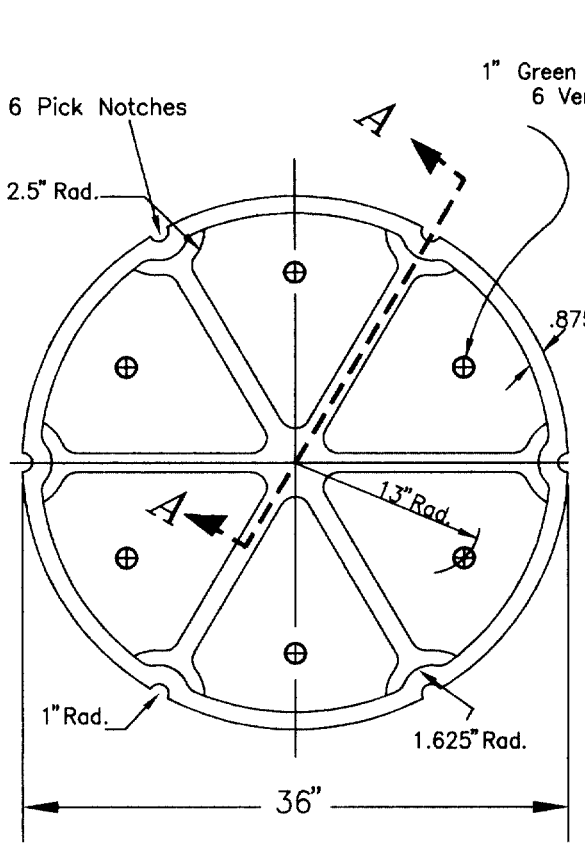


BOTTOM VIEW OF COVER
(SEE SHEET 2 OF 2
FOR ALTERNATE DESIGN)

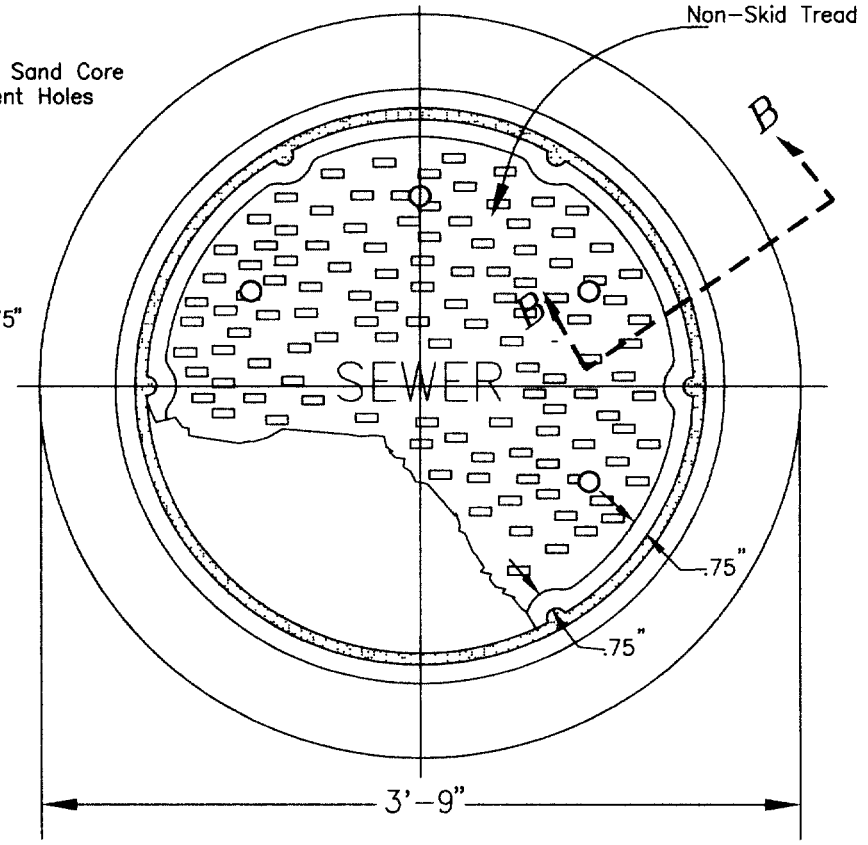


TOP VIEW OF ASSEMBLY

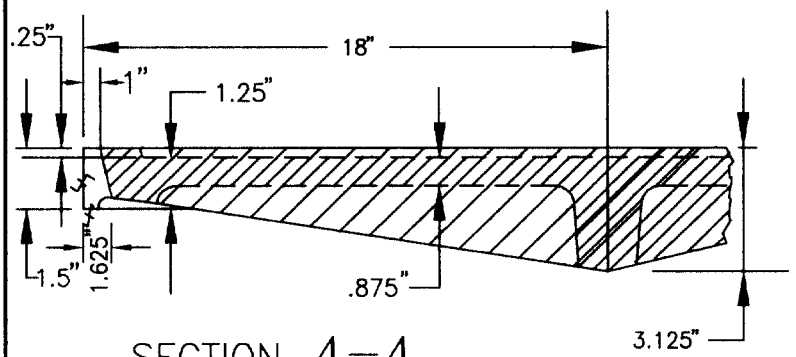


SECTION *A–A*

Approx. Weight=720 lbs.

This Drawing Previously AA–S19

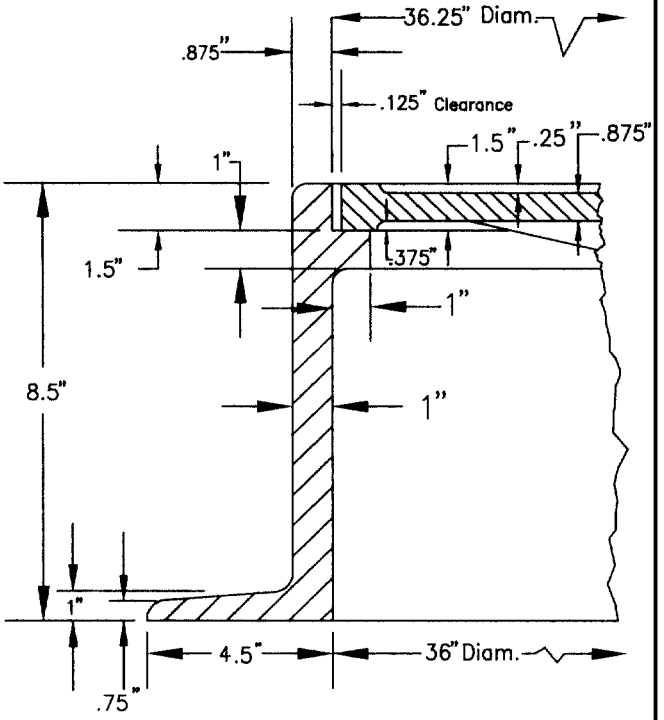


SECTION *B–B*

NOTE:
Frames, grates, and covers shall meet the requirements of 604.02 and AASHTO M306

STORMWATER PROGRAM MANAGER

ADMINISTRATOR

APPROVED

REVISED 5–16–97

STANDARD DIMENSIONS
FOR
36" MANHOLE
FRAME & COVER CASTING
(STORM SEWERS)

CITY OF COLUMBUS, OHIO
DEPARTMENT OF PUBLIC UTILITIES
DIVISION OF SEWERAGE & DRAINAGE

STANDARD
CONSTRUCTION DRAWING

DR. J.M.R.
CK.

SHEET 1 OF 2

FILE NO. AA–S114

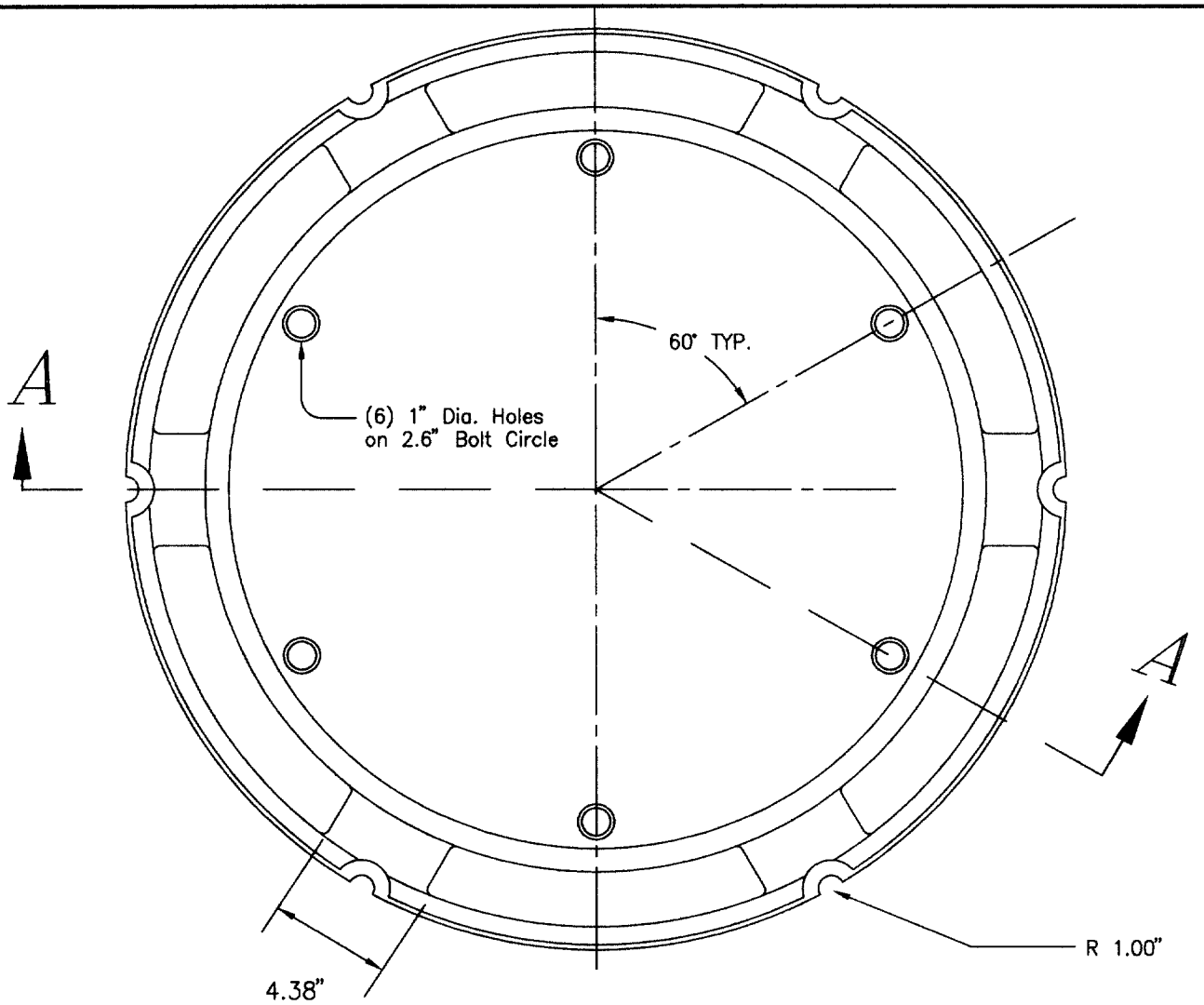


BOTTOM VIEW OF COVER

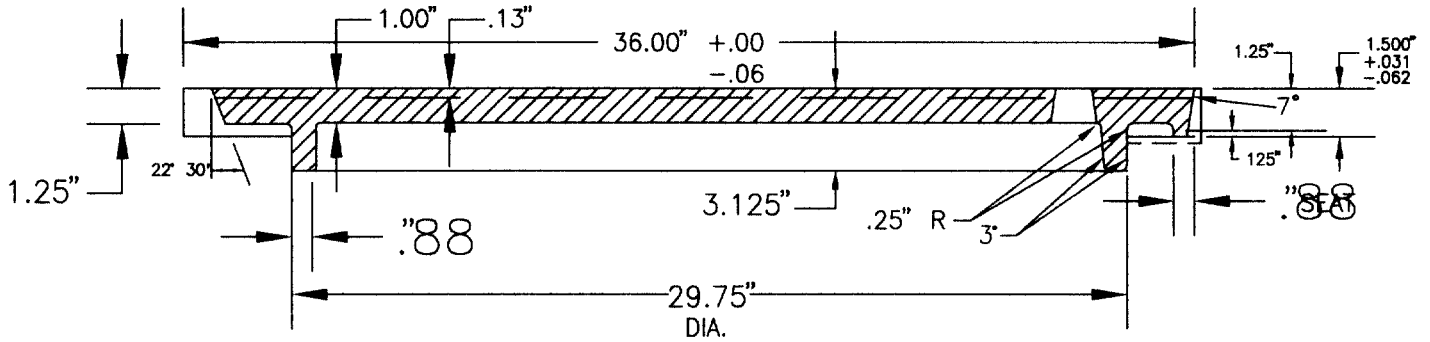


SECTION A–A

NOTE:
Frames, grates, and covers shall meet the requirements of 604.02 and AASHTO M306

| | | |
|---|---|---|
| STORMWATER PROGRAM MANAGER<br>ADMINISTRATOR | ALTERNATE DESIGN FOR 36" MANHOLE COVER (STORM SEWERS) | CITY OF COLUMBUS, OHIO<br>DEPARTMENT OF PUBLIC UTILITIES<br>DIVISION OF SEWERAGE & DRAINAGE<br>STANDARD CONSTRUCTION DRAWING |
| APPROVED / REVISED 5–16–97 | | DR. J.M.R. / CK. / SHEET 2 OF 2 / FILE NO. AA–S114 |