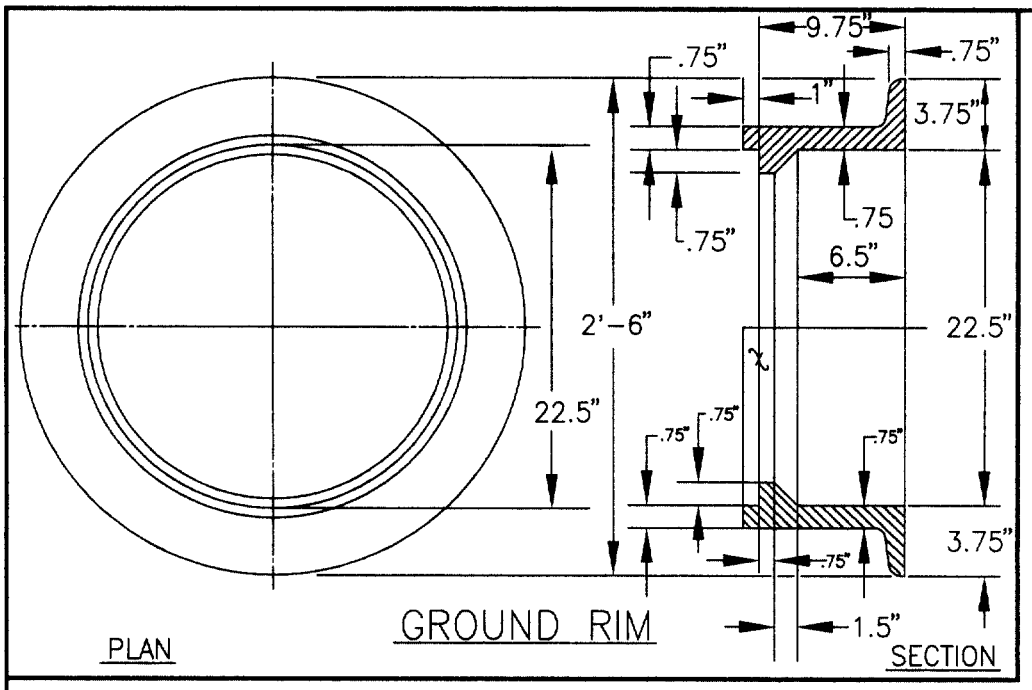

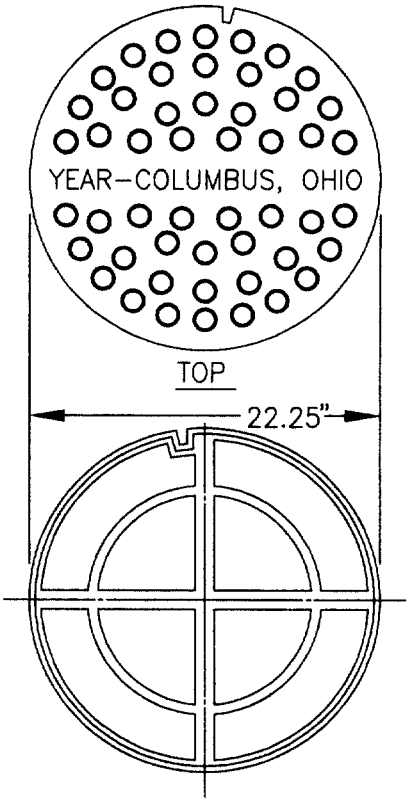

LID

Approx. Weight=355 lbs.

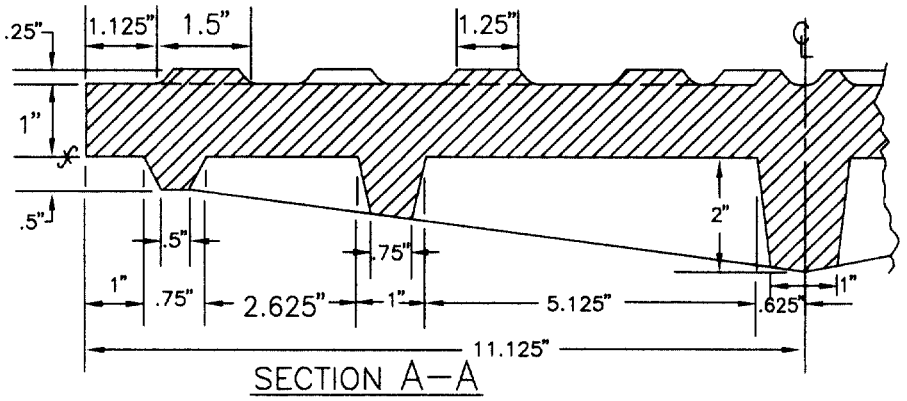

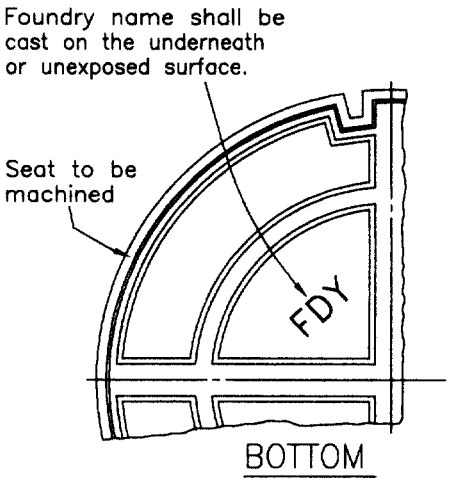

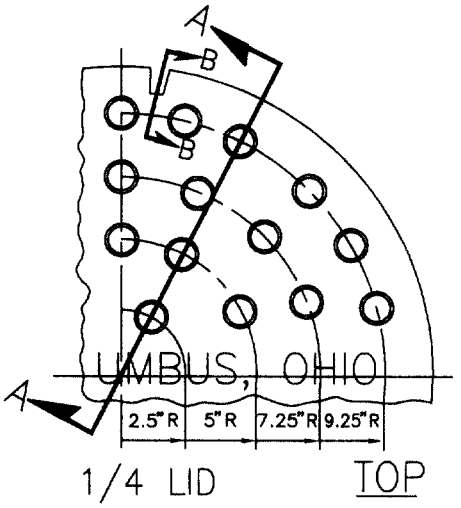

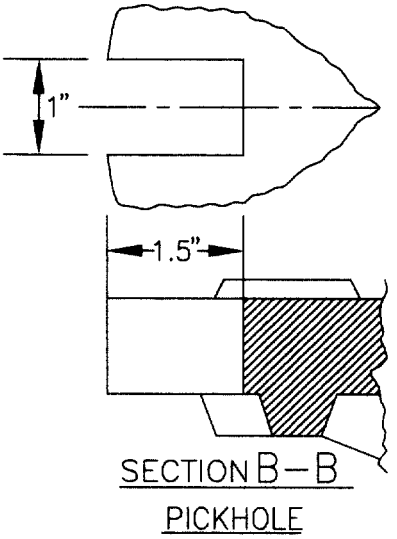

Note:
Frames, grates, and covers shall meet the requirements of 604.02 and AASHTO M306

This drawing previously AA-S36

STORMWATER PROGRAM MANAGER ADMINISTRATOR	STANDARD DIMENSIONS FOR MANHOLE FRAME & COVER CASTING (STORM SEWERS)	CITY OF COLUMBUS, OHIO DEPARTMENT OF PUBLIC UTILITIES DIVISION OF SEWERAGE & DRAINAGE STANDARD CONSTRUCTION DRAWING
APPROVED REVISED 5-16-97		DR. CAW SHEET 1 FILE NO. CK. DJH OF 1 AA-S112