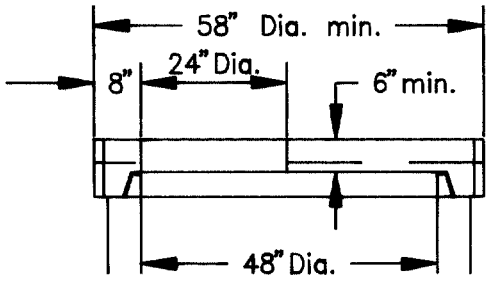

FLAT SLAB TOP
(48" Risers)

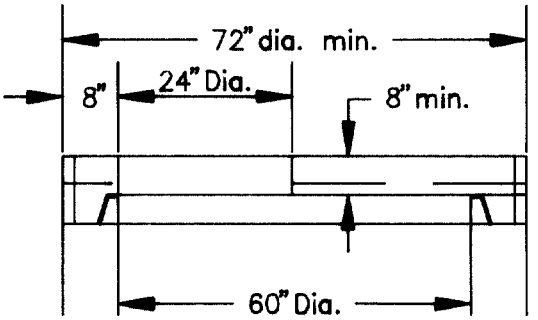

FLAT SLAB TOP
(60" Risers)

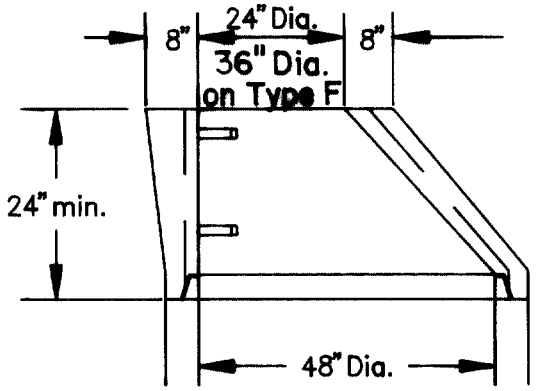

ECCENTRIC CONE TOP
(48" Risers)

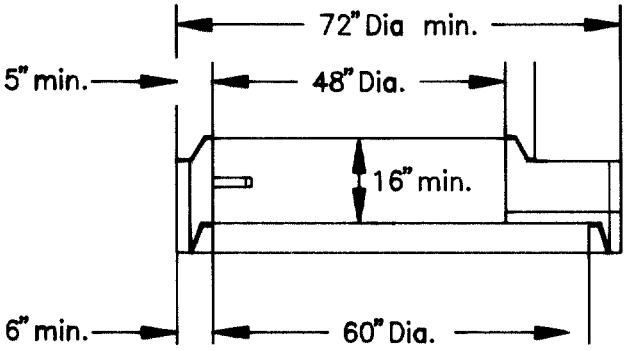

FLAT SLAB TRANSITION
(60" to 48")

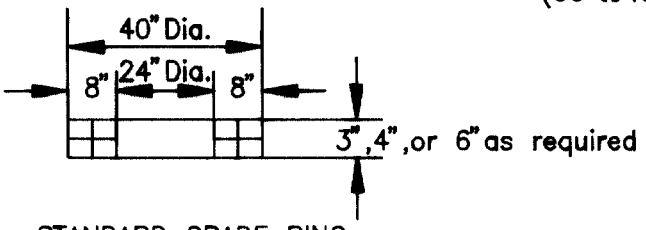

STANDARD GRADE RING

NOTE:
All items in accordance with ASTM C-478

Stephen J. Lolan
SEWER SYSTEM ENGINEERING MANAGER

Jerry Francis
ADMINISTRATOR

APPROVED 12/15/93 REVISED

MISC. ITEMS
PRECAST MANHOLES

CITY OF COLUMBUS, OHIO.
DEPARTMENT OF PUBLIC UTILITIES
DIVISION OF SEWERAGE & DRAINAGE

STANDARD
CONSTRUCTION DRAWING

DR. CAW
CK. DJH
SHEET 1 OF 1
FILE NO. AA-S107